Control Parts
Call to Order 717-209-7100

SIEMENS

Data sheet 3RT1044-1BB40

Power contactor, AC-3 65 A, 30 kW / 400 V 24 V DC, 3-pole, Size S3, screw terminal

Figure similar

Product brand name	SIRIUS
Product designation	power contactor

General technical data	
Size of contactor	S3
Insulation voltage	
• rated value	1 000 V
Degree of pollution	3
Surge voltage resistance rated value	6 kV
maximum permissible voltage for safe isolation	
• between coil and main contacts acc. to EN 60947-1	690 V
Protection class IP	
• on the front	IP20; IP20 on the front with cover / box terminal
• of the terminal	IP00
Shock resistance at rectangular impulse	
• at DC	6,8g / 5 ms, 4g / 10 ms
Shock resistance with sine pulse	

Subject to change without notice
© Copyright Siemens

• at DC	10,6g / 5 ms, 6,2g / 10 ms
Mechanical service life (switching cycles)	
• of contactor typical	10 000 000
• of the contactor with added electronics-compatible auxiliary switch block typical	5 000 000
• of the contactor with added auxiliary switch block typical	10 000 000

Ambient conditions

Installation altitude at height above sea level	
• maximum	2 000 m
Ambient temperature	
• during operation	-25 ... +60 °C
• during storage	-55 ... +80 °C

Main circuit

Number of poles for main current circuit	3
Number of NO contacts for main contacts	3
Number of NC contacts for main contacts	0
Operating current	
• at AC-1 at 400 V	
— at ambient temperature 40 °C rated value	100 A
• at AC-1	
— up to 690 V at ambient temperature 40 °C rated value	100 A
— up to 690 V at ambient temperature 60 °C rated value	90 A
— up to 1000 V at ambient temperature 40 °C rated value	50 A
— up to 1000 V at ambient temperature 60 °C rated value	40 A
• at AC-3	
— at 400 V rated value	65 A
— at 690 V rated value	47 A
— at 1000 V rated value	25 A
• at AC-4 at 400 V rated value	55 A
Connectable conductor cross-section in main circuit at AC-1	
• at 60 °C minimum permissible	35 mm²
• at 40 °C minimum permissible	35 mm²
Operating current for approx. 200000 operating cycles at AC-4	
• at 400 V rated value	28 A
• at 690 V rated value	20 A

Subject to change without notice
© Copyright Siemens

Operating current	
• at 1 current path at DC-1	
— at 24 V rated value	90 A
— at 110 V rated value	4.5 A
• with 2 current paths in series at DC-1	
— at 24 V rated value	90 A
— at 110 V rated value	90 A
• with 3 current paths in series at DC-1	
— at 24 V rated value	90 A
— at 110 V rated value	90 A
Operating current	
• at 1 current path at DC-3 at DC-5	
— at 24 V rated value	40 A
— at 110 V rated value	2.5 A
• with 2 current paths in series at DC-3 at DC-5	
— at 24 V rated value	90 A
— at 110 V rated value	90 A
• with 3 current paths in series at DC-3 at DC-5	
— at 24 V rated value	90 A
— at 110 V rated value	90 A
Operating power	
• at AC-1	
— at 230 V at 60 °C rated value	34 kW
— at 400 V rated value	59 kW
— at 690 V rated value	102 kW
— at 690 V at 60 °C rated value	102 kW
— at 1000 V at 60 °C rated value	66 W
• at AC-2 at 400 V rated value	30 kW
• at AC-3	
— at 230 V rated value	18.5 kW
— at 400 V rated value	30 kW
— at 500 V rated value	37 kW
— at 690 V rated value	45 kW
— at 1000 V rated value	30 W
Operating power for approx. 200000 operating cycles at AC-4	
• at 400 V rated value	15.1 kW
• at 690 V rated value	18.6 kW
Thermal short-time current limited to 10 s	600 A
Power loss [W] at AC-3 at 400 V for rated value of the operating current per conductor	4.6 W
No-load switching frequency	

Subject to change without notice
© Copyright Siemens

• at DC	1 000 1/h
Operating frequency	
• at AC-1 maximum	1 000 1/h
• at AC-2 maximum	400 1/h
• at AC-3 maximum	1 000 1/h
• at AC-4 maximum	300 1/h

Control circuit/ Control

Type of voltage of the control supply voltage	DC
Control supply voltage at DC	
• rated value	24 V
Operating range factor control supply voltage rated value of magnet coil at DC	
• initial value	0.8
• Full-scale value	1.1
Closing power of magnet coil at DC	15 W
Holding power of magnet coil at DC	15 W
Closing delay	
• at DC	90 ... 230 ms
Opening delay	
• at DC	14 ... 20 ms
Arcing time	10 ... 15 ms

Auxiliary circuit

Number of NC contacts	
• **for auxiliary contacts**	
— instantaneous contact	0
Number of NO contacts	
• **for auxiliary contacts**	
— instantaneous contact	0
Operating current at AC-12 maximum	10 A
Operating current at AC-15	
• at 230 V rated value	6 A
• at 400 V rated value	3 A
Operating current at DC-12	
• at 60 V rated value	6 A
• at 110 V rated value	3 A
• at 220 V rated value	1 A
Operating current at DC-13	
• at 24 V rated value	10 A
• at 60 V rated value	2 A
• at 110 V rated value	1 A
• at 220 V rated value	0.3 A

Subject to change without notice
© Copyright Siemens

Contact reliability of auxiliary contacts	1 faulty switching per 100 million (17 V, 1 mA)

UL/CSA ratings

Contact rating of auxiliary contacts according to UL	A600 / Q600

Short-circuit protection

Design of the fuse link	
• for short-circuit protection of the main circuit	
— with type of coordination 1 required	fuse gL/gG: 250 A
— with type of assignment 2 required	fuse gL/gG: 125 A
• for short-circuit protection of the auxiliary switch required	fuse gL/gG: 10 A

Installation/ mounting/ dimensions

Mounting type	screw and snap-on mounting onto 35 mm and 75 mm standard mounting rail
• Side-by-side mounting	Yes
Height	146 mm
Width	70 mm
Depth	152 mm
Required spacing	
• for grounded parts	
— at the side	6 mm

Connections/Terminals

Type of electrical connection	
• for main current circuit	screw-type terminals
• for auxiliary and control current circuit	screw-type terminals
Type of connectable conductor cross-sections	
• for main contacts	
— solid	2x (2.5 ... 16 mm²)
— stranded	2x (10 ... 50 mm²)
— single or multi-stranded	2x (2,5 ... 16 mm²)
— finely stranded with core end processing	2x (2.5 ... 35 mm²)
— finely stranded without core end processing	2x (10 ... 35 mm²)
• at AWG conductors for main contacts	2x (10 ... 1/0)
Type of connectable conductor cross-sections	
• for auxiliary contacts	
— solid	2x (0.5 ... 1.5 mm²), 2x (0.75 ... 2.5 mm²), max. 2x (0.75 ... 4 mm²)
— finely stranded with core end processing	2x (0.5 ... 1.5 mm²), 2x (0.75 ... 2.5 mm²)
• at AWG conductors for auxiliary contacts	2x (20 ... 16), 2x (18 ... 14), 1x 12

Certificates/approvals

Subject to change without notice
© Copyright Siemens

General Product Approval				Functional Safety/Safety of Machinery	Declaration of Conformity
CCC	CSA	UL	EAC	Type Examination Certificate	EG-Konf.

Test Certificates			Marine / Shipping		
Type Test Certificates/Test Report	Special Test Certificate	Miscellaneous	ABS	LRS	RINA

Marine / Shipping	other	
RMRS	Confirmation	Miscellaneous

Further information

Information- and Downloadcenter (Catalogs, Brochures,…)
http://www.siemens.com/industrial-controls/catalogs

Industry Mall (Online ordering system)
https://mall.industry.siemens.com/mall/en/en/Catalog/product?mlfb=3RT1044-1BB40

Cax online generator
http://support.automation.siemens.com/WW/CAXorder/default.aspx?lang=en&mlfb=3RT1044-1BB40

Service&Support (Manuals, Certificates, Characteristics, FAQs,...)
https://support.industry.siemens.com/cs/ww/en/ps/3RT1044-1BB40

Image database (product images, 2D dimension drawings, 3D models, device circuit diagrams, EPLAN macros, ...)
http://www.automation.siemens.com/bilddb/cax_de.aspx?mlfb=3RT1044-1BB40&lang=en

Characteristic: Tripping characteristics, I^2t, Let-through current
https://support.industry.siemens.com/cs/ww/en/ps/3RT1044-1BB40/char

Further characteristics (e.g. electrical endurance, switching frequency)
http://www.automation.siemens.com/bilddb/index.aspx?view=Search&mlfb=3RT1044-1BB40&objecttype=14&gridview=view1

Subject to change without notice
© Copyright Siemens

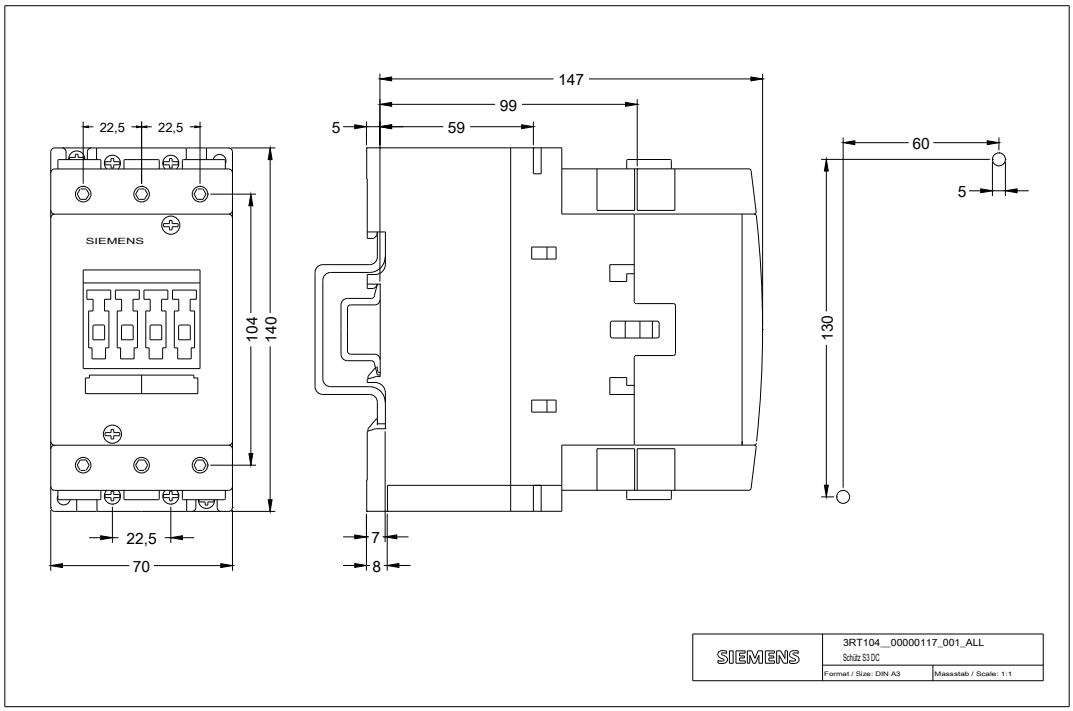

Subject to change without notice
© Copyright Siemens

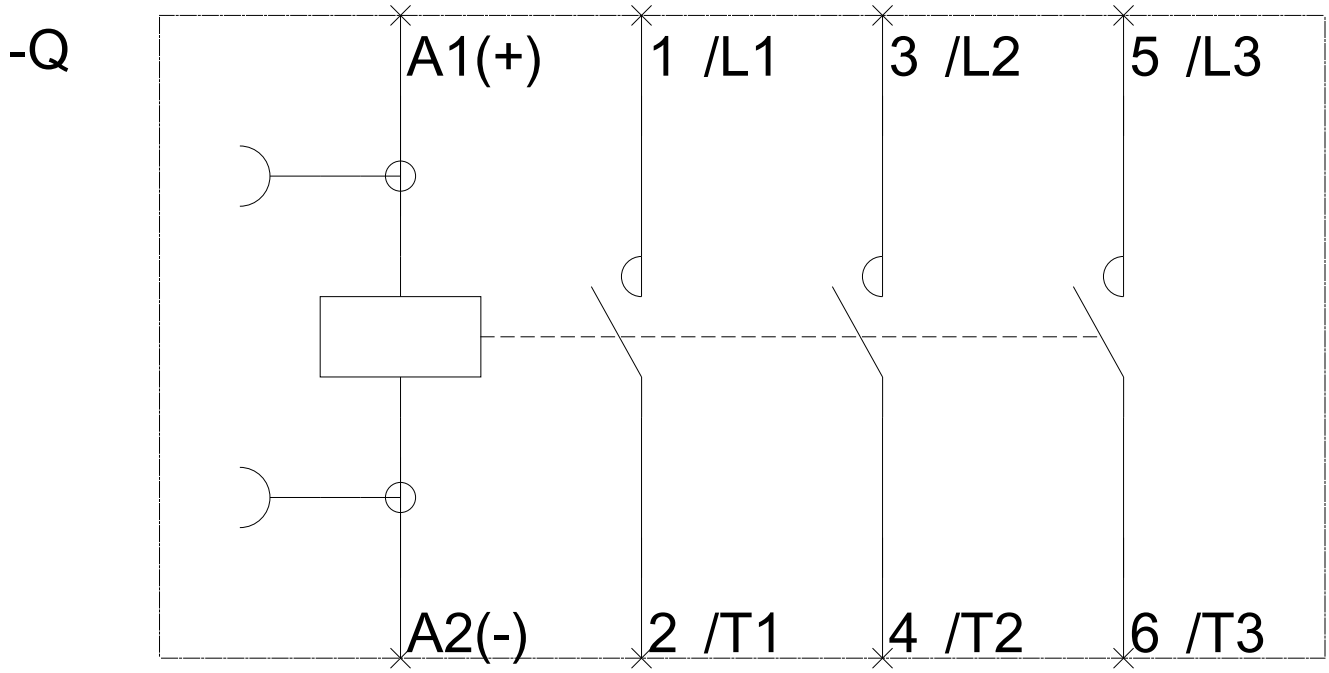

last modified: 04/19/2018

Subject to change without notice
© Copyright Siemens